2003 "B-C" State Wrestling Tournament

Team Rankings

1.	CON	Conrad	218.5
2.	CHO	Choteau	118.5
3.	ARL	Arlee	107.0
4.	SHP	Shepherd	107.0
5.	GLA	Glasgow	73.0
6.	POP	Poplar	72.0
7.	STI	St. Ignatius	65.0
8.	BAK	Baker	61.0
9.	EUR	Eureka (Lincoln Co.)	60.0
10.	CBH	Cut Bank	57.0
11.	SUP	Superior	57.0
12.	TSD	Townsend	56.0
13.	FTN	Frenchtown	53.5
14.	SMS	Simms	53.0
15.	MAL	Malta	51.0
16.	WHL	Whitehall	48.0
17.	FRF	Fairfield	47.0
18.	DLG	Deer Lodge	47.0
19.	CAS	Cascade	42.0
20.	HPH	Huntley Project	41.0
21.	TFS	Thompson Falls	39.0
22.	SHE	Shelby	31.5
23.	BSY	Big Sandy	28.0
24.	CHK	Chinook	26.0
25.	FLC	Florence-Carlton	25.0
26.	COL	Columbus	22.5
27.	LOY	Loyola Sacred Heart	17.0
28.	PLA	Plains	14.0
29.	BOU	Boulder (Jefferson)	13.0
30.	FTB	Fort Benton	13.0
31.	BRO	Broadus (Powder Rvr)	6.5
32.	DAR	Darby	5.0
33.	VAL	Valier	5.0
34.	WPT	Wolf Point	4.0
35.	CHE	Chester	3.0
36.	FOR	Forsyth	0.0
37.	CIR	Circle	0.0
38.	HRM	Harlem	-1.0

2003 "B-C" State Wrestling Tournament

CHAMPIONS BRACKET 98 LB

Lytle,C.ARL (1) — LeFurgey,A.FTB
Lytle — 1.42—PIN (169)

**** BYE **** (2) — Black,E.CBH
Black — 0-0—BYE

Lytle — 2.55—PIN (309)

**** BYE **** (3) — Overcast,C.CHK
Overcast — 0-0—BYE (170)

McCully,P.EUR (4) — Fryberger,D.SMS
Fryberger — 0.26—PIN

Fryberger — 0.34—PIN

Fryberger — 4-0—D

O'Leary,T.SHP (5) — **** BYE ****
O'Leary — 0-0—BYE (171)

Bick,C.FTN (6) — Nelson,T.WHL
Bick — 6-2—D

Bick — 15-1—MD (310)

Middlemist,K.STI (7) — Clark,P.CAS
Middlemist 13-7—D (172)

**** BYE **** (8) — Durnell,C.CON
Durnell — 0-0—BYE

Durnell — 0.36—PIN

Durnell — 13-2—MD

(393) CHAMPION Fryberger — 6-0—D

CONSOLATION BRACKET 98 LB

LeFurgey,A.FTB (113) — **** BYE ****
Middlemist,K.STI (225) — LeFurgey — 0-0—BYE
Middlemist 2.55—PIN (281)

**** BYE **** (114) — McCully,P.EUR
McCully — 0-0—BYE (226) — O'Leary,T.SHP
O'Leary — 3.51—PIN

Middlemist — 9-0—MD (337) — Lytle,C.ARL

**** BYE **** (115) — Nelson,T.WHL
Overcast,C.CHK (227) — Nelson — 0-0—BYE
Nelson — 2.25—PIN (282)

Clark,P.CAS (116) — **** BYE ****
Clark — 0-0—BYE (228) — Black,E.CBH
Clark — 2.29—PIN

Nelson — 5-2—D (338) — Bick,C.FTN

Middlemist 8-2—D (365) — Bick — 9-2—D
Bick — 7-6—D — 3RD

Lytle,C.ARL (366) — Nelson,T.WHL
Nelson — 0.37—PIN — 5TH

2003 "B-C" State Wrestling Tournament

CHAMPIONS BRACKET 105 LB

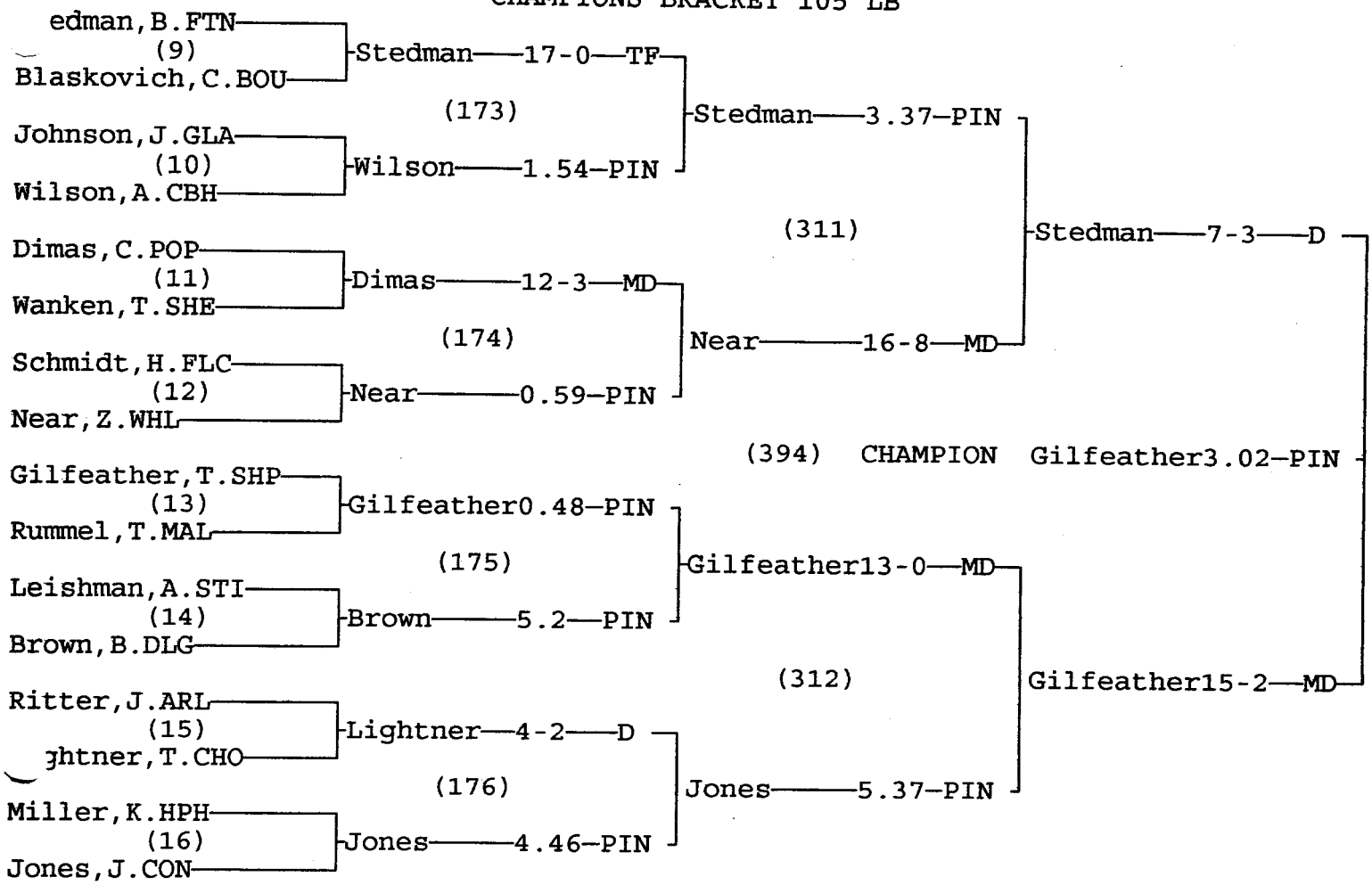

CONSOLATION BRACKET 105 LB

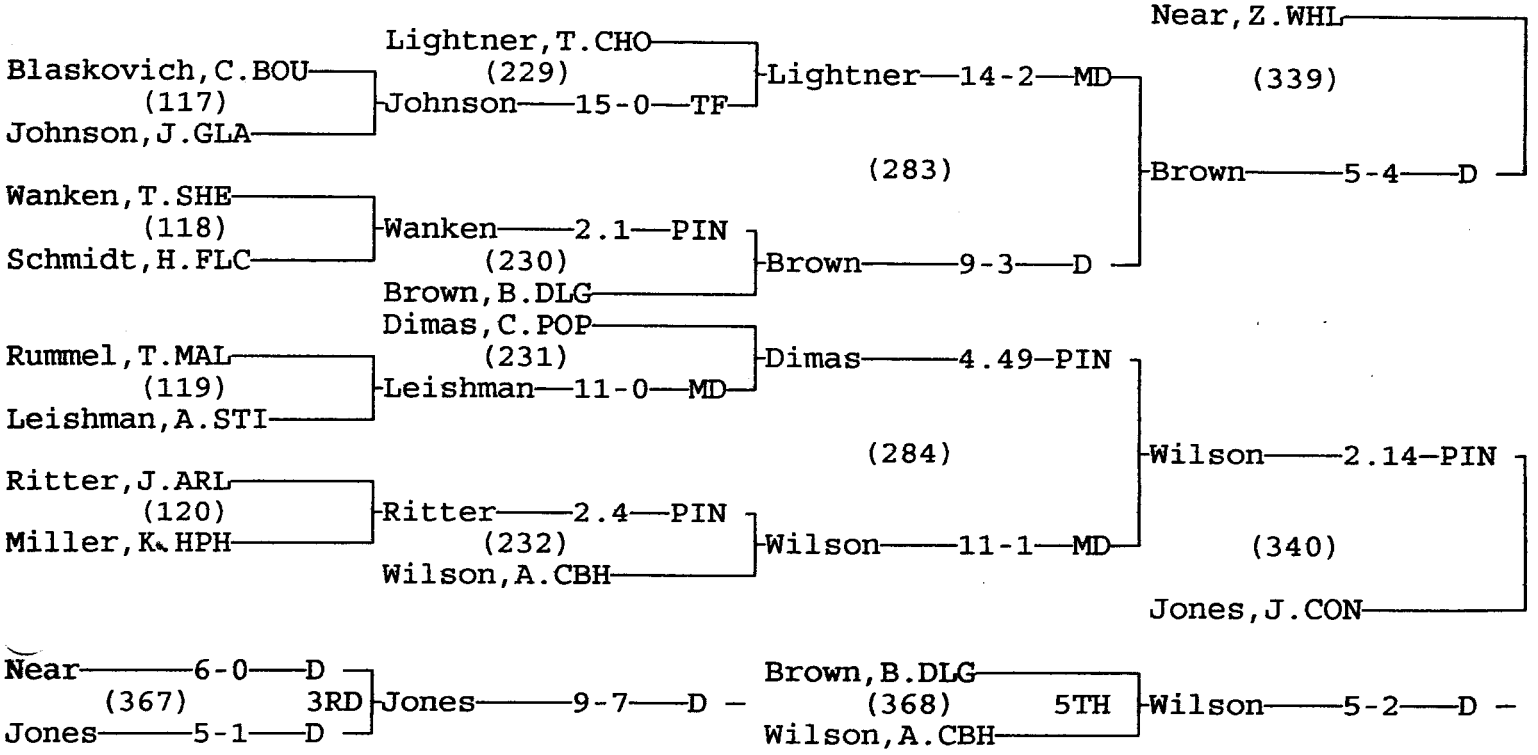

2003 "B-C" State Wrestling Tournament

CHAMPIONS BRACKET 112 LB

Trujillo,D.ARL (17) Near,M.WHL — Trujillo—0.58—PIN (177)

Troutman,T.HPH (18) Lunak,B.CBH — Troutman—1.1—PIN (177)

Trujillo—15-3—MD (313)

Ayers,M.POP (19) Finley,M.CHK — Ayers—10-3—D (178)

Bantam,J.PLA (20) Rauser,L.TSD — Rauser—1.11—PIN (178)

Rauser—1.23—PIN (313)

Trujillo—3.3—PIN (395) CHAMPION

Johnston,C.GLA (21) McBride,C.SHE — Johnston—0.44—PIN (179)

Barrus,S.TFS (22) Corpron,S.BOU — Barrus—0-0—FORF (179)

Johnston—12-7—D (314)

Long,Z.FTN (23) Rice,M.CHO — Long—10-3—D (180)

**** BYE **** (24) Gervais,B.CON — Gervais—0-0—BYE (180)

Long—2.57—PIN (314)

Trujillo—1-0—D (395) CHAMPION

Johnston—17-4—MD (395) CHAMPION

CONSOLATION BRACKET 112 LB

Near,M.WHL (121) Lunak,B.CBH — Gervais,B.CON (233) Lunak—9-5—D (233)

Lunak—7-2—D (285)

Finley,M.CHK (122) Bantam,J.PLA — Finley—14-3—MD (234) Barrus,S.TFS (234)

Barrus—2.46—PIN (285)

McBride,C.SHE (123) Corpron,S.BOU — Ayers,M.POP (235) McBride—0-0—FORF (235)

Ayers—1.5—PIN (286)

Rice,M.CHO (124) **** BYE **** — Rice—0-0—BYE (236) Troutman,T.HPH (236)

Rice—4-2—D (286)

Rauser,L.TSD (341) Barrus—3.03—PIN (341)

Ayers—9-2—D (342) Long,Z.FTN (342)

Barrus—6-4—D (369) Ayers—3-2—D (369) 3RD — Ayers—7-5—D (370)

Rauser,L.TSD (370) Long,Z.FTN (370) 5TH — Rauser—1.44—PIN (370)

2003 "B-C" State Wrestling Tournament

CHAMPIONS BRACKET 119 LB

Gillivray,T.SUP (25) May,N.FTB — McGillivra 1.39–PIN

Enos,C.BAK (26) French,T.MAL — French 4-1 D

(181) McGillivra 5-0 D

Shaules,S.SHP (27) Solberg,C.SHE — Shaules 4.57–PIN

Henderson,J.FTN (28) Neal,R.CHO — Neal 4.34–PIN

(182) Neal 3.33–PIN

(315) McGillivra 12-2 MD

Feller,J.GLA (29) Parsons,C.CHK — Feller 9-5 D

Lyons,S.TFS (30) Enochs,J.SMS — Lyons 7-3 D

(183) Feller 1-0 D

(396) CHAMPION McGillivra 6-2 D

Rodda,C.STI (31) itney,S.DLG — Whitney 3.47–PIN

Rogge,K.BRO (32) Lockyer,C.CON — Lockyer 2.49–PIN

(184) Lockyer 16-5 MD

(316) Lockyer 16-0 TF

CONSOLATION BRACKET 119 LB

May,N.FTB (125) Enos,C.BAK — May 5-0 D

Whitney,S.DLG (237) — Whitney 2.06–PIN

Solberg,C.SHE (126) Henderson,J.FTN — Solberg 5-2 D

Lyons,S.TFS (238) — Lyons 2-1 D

(287) Lyons 6-2 D

Neal,R.CHO (343)

Parsons,C.CHK (127) Enochs,J.SMS — Enochs 11-3 MD

Shaules,S.SHP (239) — Enochs 2.11–PIN

Rodda,C.STI (128) Rogge,K.BRO — Rodda 1.15–PIN

French,T.MAL (240) — French 9-0 MD

(288) French 5-4 D

Feller,J.GLA (344)

Neal 4-0 D (371) French 4-0 D — 3RD Neal 8-5 D

Lyons,S.TFS (372) Feller,J.GLA — 5TH Feller 3-1 D

2003 "B-C" State Wrestling Tournament

CHAMPIONS BRACKET 125 LB

McGillivray,B.SUP (33) Fletcher,A.BOU — McGillivra1.25—PIN

(185)

Hunter,B.BAK (34) Watson,S.SHE — Hunter——5.11—PIN

McGillivra1.37—PIN

(317)

Dvorak,E.HPH (35) Blunt,J.MAL — Dvorak——5.11—PIN

(186)

Hammond,S.STI (36) Griffiths,S.SMS — Griffiths—4.33—PIN

Griffiths—1.43—PIN

Griffiths—8-1——D

(397) CHAMPION Harrington4-2——D

Eustice,M.BRO (37) Boyce,J.BSY — Eustice——19-2——TF

(187)

Redmon,B.FLC (38) Harrington,J.DLG — Harrington1.35—PIN

Harrington11-3——MD

(318)

Flotre,T.TFS (39) Hodgskiss,K.CHO — Hodgskiss—8-0——MD

(188)

Cossitt,A.SHP (40) Johnson,R.CON — Johnson——1.05—PIN

Johnson——5-3——D

Harrington4-1——D

CONSOLATION BRACKET 125 LB

Fletcher,A.BOU (129) Watson,S.SHE — Hodgskiss,K.CHO (241) Watson——0.59—PIN

Hodgskiss—4-0——D

(289)

Blunt,J.MAL (130) Hammond,S.STI — Blunt——7-2——D (242) Eustice,M.BRO

Eustice——2.42—PIN

McGillivray,B.SUP (345)

Hodgskiss—6-0——D

Boyce,J.BSY (131) Redmon,B.FLC — Dvorak,E.HPH (243) Redmon——21-16—D

Redmon——9-6——D

(290)

Flotre,T.TFS (132) Cossitt,A.SHP — Flotre——0.35—PIN (244) Hunter,B.BAK

Flotre——10-7——D

Flotre——5-3——D

(346)

Johnson,R.CON

McGillivra1.44—PIN (373) 3RD Johnson——6-1——D — Johnson——6-3——D

Hodgskiss,K.CHO (374) 5TH Flotre,T.TFS — Hodgskiss—6-2——D

2003 "B-C" State Wrestling Tournament

CHAMPIONS BRACKET 130 LB

llins,S.STI (41) Johnson,J.GLA — Mullins 1.55-PIN

Fitzgerald,H.CBH (42) Sheridan,D.TSD — Sheridan 5-3 D

(189) — Mullins 6-2 D

Yarn,J.SHE (43) Miller,J.COL — Yarn 4-2 D

Dietrich,A.EUR (44) Gilfeather,D.SHP — Gilfeather 2.2 PIN

(190) — Gilfeather 12-5 D

(319) — Gilfeather 6-2 D

Madel,G.CHO (45) Parsons,K.CHK — Madel 1.24-PIN

McKinsey,C.HPH (46) Ritter,R.ARL — Ritter 5-1 D

(191) — Ritter 4-2 D

Fetterer,C.FOR (47) bels,P.FTN — Nobels 9-8 D

Crismore,T.DLG (48) Zempel,T.CON — Zempel 13-4 MD

(192) — Zempel 13-4 MD

(320) — Zempel 10-8 D

(398) CHAMPION Gilfeather 11-2 MD

CONSOLATION BRACKET 130 LB

Johnson,J.GLA (133) Fitzgerald,H.CBH — Fitzgerald 1.39-PIN

Nobels,P.FTN (245) — Fitzgerald 2.53-PIN

Miller,J.COL (134) Dietrich,A.EUR — Miller 4.57-PIN

Madel,G.CHO (246) — Madel 5-1 D

(291) — Madel 2.27-PIN

Mullins,S.STI (347)

Parsons,K.CHK (135) McKinsey,C.HPH — McKinsey 4.49-PIN

Yarn,J.SHE (247) — Yarn 5-3 D

Fetterer,C.FOR (136) Crismore,T.DLG — Crismore 10-2 MD

Sheridan,D.TSD (248) — Sheridan 4-2 D

(292) — Sheridan 5-2 D

(348) Ritter,R.ARL

Mullins 10-8 D (375) Sheridan 1.59-PIN 3RD — Mullins 6-3 D

Madel,G.CHO (376) Ritter,R.ARL 5TH — Madel 0.53-PIN

2003 "B-C" State Wrestling Tournament

CHAMPIONS BRACKET 135 LB

Hoerner,T.EUR (49) Hill,J.HPH — Hoerner 1.02-PIN
Askelson,R.CBH (50) Mosher,R.CHO — Mosher 4-3 D
(193) Hoerner 7-0 D
Murr,D.CON (51) Bolstad,B.BOU — Murr 4-2 D
Briggs,D.TFS (52) Hopstad,N.GLA — Hopstad 16-0 TF
(194) Hopstad 3.39-PIN
(321) Hopstad 5-3 D
Walston,J.COL (53) Bonderud,J.SHE — Walston 0.41-PIN
Sorge,S.SHP (54) McCay,A.ARL — McCay 3-2 D
(195) McCay 5-4 D
Miller,B.BAK (55) Middlemist,R.STI — Middlemist 3.58-PIN
Woodland,R.CAS (56) Trafelet,J.VAL — Trafelet 2.47-PIN
(196) Middlemist 6-2 D
(322) McCay 8-1 D
(399) CHAMPION Hopstad 7-6 D

CONSOLATION BRACKET 135 LB

Hill,J.HPH (137) Askelson,R.CBH — Askelson 4.23-PIN
Trafelet,J.VAL (249) — Trafelet 6-0 D
Bolstad,B.BOU (138) Briggs,D.TFS — Bolstad 8-4 D
Walston,J.COL (250) — Walston 13-8 D
(293) Walston 17-0 TF
Hoerner,T.EUR (349)
Bonderud,J.SHE (139) Sorge,S.SHP — Sorge 6-2 D
Murr,D.CON (251) — Murr 8-3 D
Miller,B.BAK (140) Woodland,R.CAS — Miller 1.28-PIN
Mosher,R.CHO (252) — Mosher 4.39-PIN
(294) Murr 11-4 D
Middlemist,R.STI (350)

Walston 3-2 D
(377) 3RD Walston 2.01-PIN
Murr 3-1 D

Hoerner,T.EUR
(378) 5TH Hoerner 1.17-PIN
Middlemist,R.STI

2003 "B-C" State Wrestling Tournament

CHAMPIONS BRACKET 140 LB

Bosley,J.STI (57) Marsh,S.GLA — Bosley 0.46-PIN
(197)
Beaudette,R.BSY (58) Moldenhauer,J.TSD — Moldenhaue 2.19-PIN

Bosley — Moldenhaue 2.47-PIN
(323)
Moldenhaue 3.26-PIN

Laverdure,R.CBH (59) Dowell,K.FRF — Dowell 15-8 D
(198)
Anderson,M.LOY (60) Sorge,L.SHP — Sorge 0-0 DFLT

Dowell — Sorge 21-8 MD

(400) CHAMPION Lockyer 8-6 D

May,T.CAS (61) Brown,C.CHE — May 1.18-PIN
(199)
Oblander,R.HPH (62) Paine,G.EUR — Paine 6-2 D

May — 3.22-PIN
(324)
Lockyer 2.52-PIN

Rikala,R.BAK (63) McNeece,J.FLC — Rikala 3.19-PIN
(200)
Denty,E.DLG (64) Lockyer,Z.CON — Lockyer 3.21-PIN

Rikala — 7-0 D

CONSOLATION BRACKET 140 LB

Marsh,S.GLA (141) Beaudette,R.BSY — Rikala,R.BAK (253) Beaudette 3.26-PIN

Rikala — 4.28-PIN
(295)
Sorge,L.SHP (351)

Laverdure,R.CBH (142) Anderson,M.LOY — Laverdure 0-0 DFLT (254) Paine,G.EUR — Paine 12-5 D

Paine — 4-3 D

Brown,C.CHE (143) Oblander,R.HPH — Dowell,K.FRF (255) Oblander 5.48-PIN

Dowell — 11-4 D
(296)
McNeece,J.FLC (144) Denty,E.DLG — McNeece 4-2 D (256) Bosley,J.STI — McNeece 9-5 D

Dowell — 9-4 D
(352)
May,T.CAS

Sorge 10-4 D (379) May 11-4 D — Sorge 2.42-PIN 3RD

Paine,G.EUR (380) Dowell,K.FRF — Paine 2.55-PIN 5TH

2003 "B-C" State Wrestling Tournament

CHAMPIONS BRACKET 145 LB

Kujala,D.PLA
(65)
Malnaa,T.GLA

Carroll,P.CON
(66)
Bryant,C.BOU

Davis,D.MAL
(67)
Betcher,P.CHO

Evers,P.DAR
(68)
Gentilini,J.BAK

Louma,C.FRF
(69)
Cochran,A.HRM

Budell,J.HPH
(70)
Smith,R.ARL

Jones,T.SHP
(71)
Bentley,L.EUR

Fuhrman,C.DLG
(72)
Zell,L.SHE

Kujala — 0.23—PIN
(201)
Bryant — 7-0 — D

Davis — 7-6 — D
(202)
Gentilini—3.33—PIN

Louma — 3.43—PIN
(203)
Smith — 3.32—PIN

Bentley — 13-9 — D
(204)
Zell — 23-7 — TF

Kujala — 7-2 — D
(325)
Gentilini—4.32—PIN

Louma — 13-4 — MD
(326)
Zell — 5.15—PIN

Gentilini—5-2 — D
(401) CHAMPION
Louma — 15-4 — MD

Gentilini—11-4 — D

CONSOLATION BRACKET 145 LB

Malnaa,T.GLA
(145)
Carroll,P.CON

Betcher,P.CHO
(146)
Evers,P.DAR

Cochran,A.HRM
(147)
Budell,J.HPH

Jones,T.SHP
(148)
Fuhrman,C.DLG

Bentley,L.EUR
(257)
Carroll — 1.31—PIN

Betcher — 19-3 — TF
(258)
Smith,R.ARL

Davis,D.MAL
(259)
Budell — 0.19—PIN

Fuhrman — 12-8 — D
(260)
Bryant,C.BOU

Bentley — 11-8 — D
(297)
Smith — 4-3 — D

Davis — 28-15—MD
(298)
Bryant — 10-2 — MD

Kujala,D.PLA
(353)
Smith — 3.55—PIN

Bryant — 7-4 — D
(354)
Zell,L.SHE

Smith — 8-6 — D
(381) 3RD
Zell — 8-0 — MD

Zell — 6-3 — D

Kujala,D.PLA
(382) 5TH
Bryant,C.BOU

Kujala — 6-2 — D

2003 "B-C" State Wrestling Tournament

CHAMPIONS BRACKET 152 LB

rney, P.ARL (73) Thompson, E.CBH — Carney — 2.21—PIN
(205)
Hansen, M.DLG (74) Morehouse, L.GLA — Morehouse — 1.52—PIN

Carney — 10-0 — MD
(327)
Ahmed — 1-0 — D

Idland, K.FRF (75) DeCock, B.HPH — DeCock — 19-7 — MD
(206)
Bauer, C.STI (76) Ahmed, D.CON — Ahmed — 0.19—PIN

Ahmed — 5.2 — PIN

(402) CHAMPION Passmore — 3-0 — D

Passmore, A.CHO (77) Willson, R.SHP — Passmore — 2.49—PIN
(207)
Higgins, R.DAR (78) Miller, H.CHK — Higgins — 8-5 — D

Passmore — 0.24—PIN
(328)
Passmore — 8-6 — D

McChesney, D.FLC (79) ns, S.MAL — McChesney — 9-2 — D
(208)
Armstrong, H.TSD (80) Dimas, C.POP — Dimas — 2.21—PIN

Dimas — 6-5 — D

CONSOLATION BRACKET 152 LB

Carney, P.ARL
(355)
McChesney, D.FLC (261) Thompson, E.CBH (149) Hansen, M.DLG — Hansen — 4.57—PIN — McChesney — 14-1 — MD

McChesney — 9-4 — D
(299)
Idland, K.FRF (150) Bauer, C.STI — Bauer — 0-0 — DFLT
(262)
Higgins, R.DAR — Higgins — 2.35—PIN

DeCock, B.HPH (263) Willson, R.SHP (151) Miller, H.CHK — Miller — 10-6 — D — Miller — 10-4 — D

Morehouse — 6-3 — D
(300)
Sims, S.MAL (152) Armstrong, H.TSD — Sims — 1.39—PIN
(264)
Morehouse, L.GLA — Morehouse — 4.11—PIN

(356)
Dimas, C.POP

Carney — 7-4 — D
(383) 3RD
Dimas — 4-3 — D — Dimas — 4-1 — D

McChesney, D.FLC
(384) 5TH
Morehouse, L.GLA — Morehouse — 9-4 — D

2003 "B-C" State Wrestling Tournament

CHAMPIONS BRACKET 160 LB

Whetzel,B.ARL (81) Makelky,A.CON — Whetzel — 1.36–PIN
(209)
Stott,M.CHO (82) George,R.GLA — Stott — 3.15–PIN
Whetzel — 1.32–PIN
(329)
Graveley,J.DLG (83) Desjarlais,N.WPT — Desjarlais 0-0 — DFLT
(210)
Miller,K.PLA (84) French,W.MAL — French — 2.59–PIN
French — 13-1 — MD
French — 5.32–PIN
(403) CHAMPION French — 1.1 — PIN
Merkel,C.WHL (85) Murray,S.SHP — Merkel — 0.22–PIN
(211)
Alexander,D.SUP (86) Reishus,P.BSY — Alexander — 8-7 — D
Merkel — 18-5 — MD
(330)
Faroni,M.STI (87) Greenwood,B.CBH — Faroni — 6-2 — D
(212)
Galloway,R.FTB (88) Richardson,C.CIR — Galloway — 9-4 — D
Faroni — 15-13 — D
Merkel — 7-6 — D

CONSOLATION BRACKET 160 LB

Makelky,A.CON (153) George,R.GLA — George — 7-5 — D
Galloway,R.FTB (265)
Galloway — 2.18–PIN
(301)
Graveley,J.DLG (154) Miller,K.PLA — Miller — 0-0 — DFLT
(266)
Alexander,D.SUP
Alexander — 3-1 — D
Whetzel,B.ARL (357)
Alexander — 8-4 — D
Murray,S.SHP (155) Reishus,P.BSY — Reishus — 4.17–PIN
Desjarlais,N.WPT (267)
Reishus — 10-4 — D
(302)
Greenwood,B.CBH (156) Richardson,C.CIR — Greenwood — 4.01–PIN
(268)
Stott,M.CHO
Stott — 6-4 — D
Reishus — 1.17–PIN
(358)
Faroni,M.STI

Alexander — 6-4 — D
(385) 3RD
Reishus — 6-3 — D
Alexander — 6-5 — D
Whetzel,B.ARL
(386) 5TH
Faroni,M.STI
Faroni — 8-1 — D

2003 "B-C" State Wrestling Tournament

CHAMPIONS BRACKET 171 LB

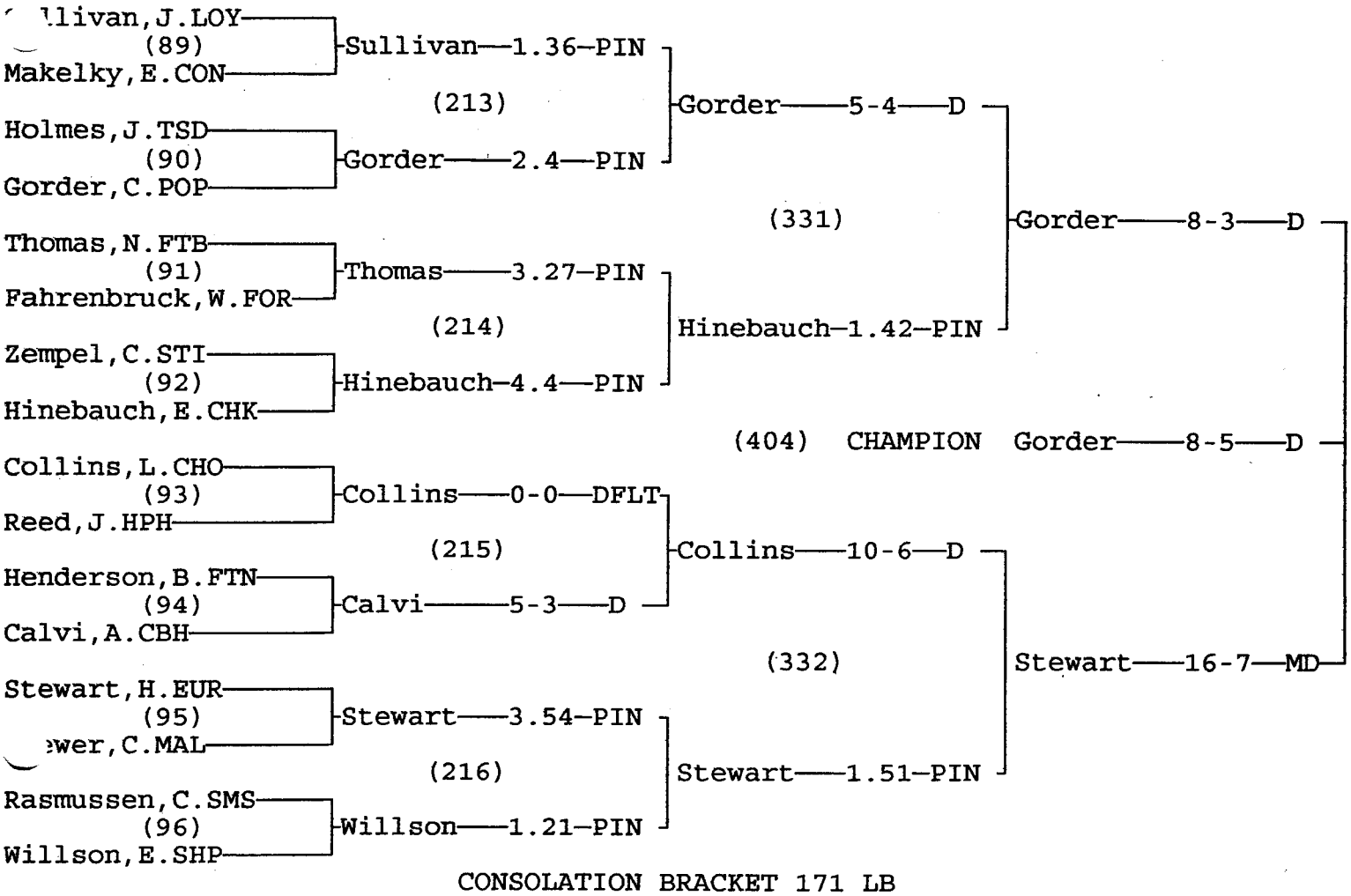

CONSOLATION BRACKET 171 LB

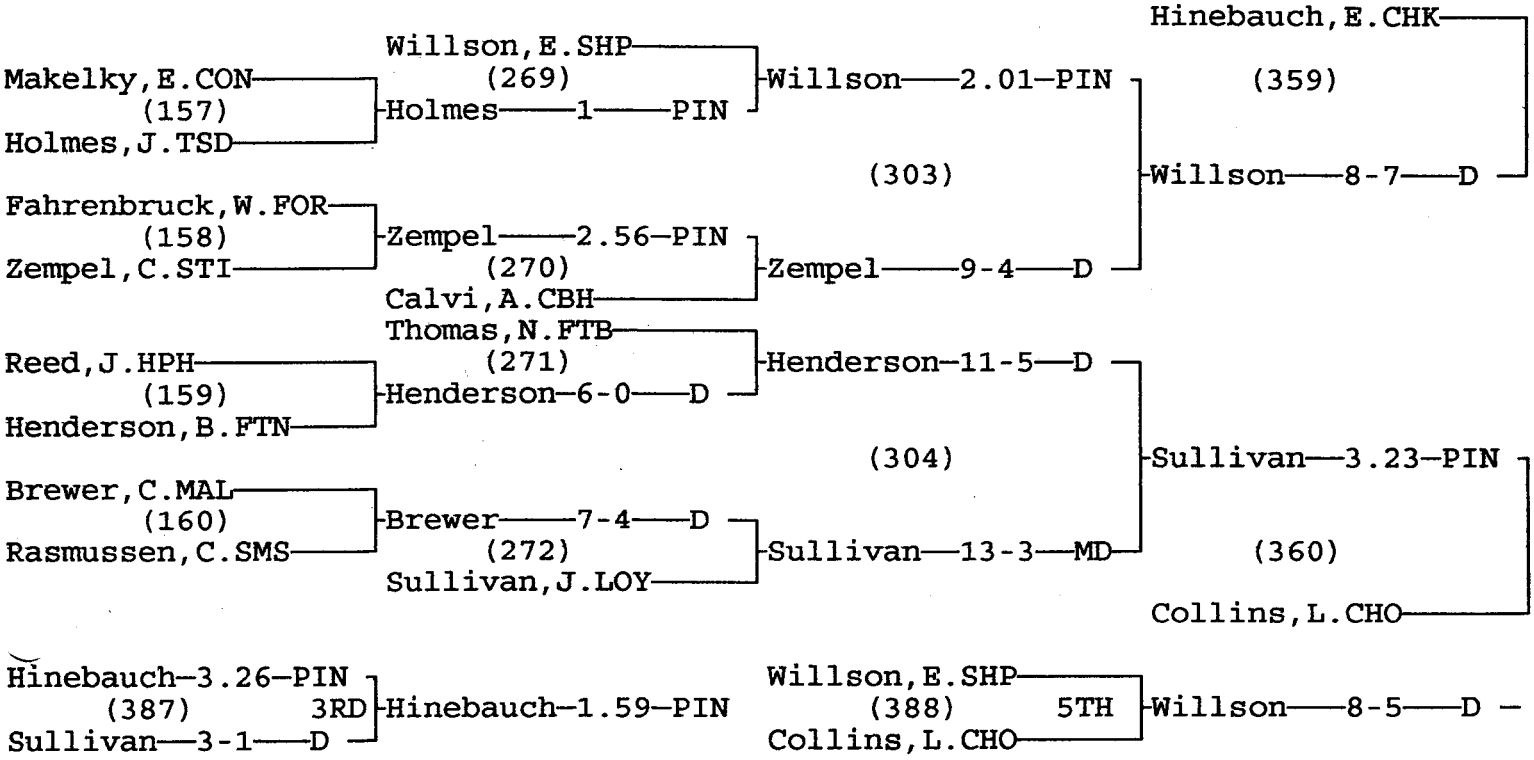

2003 "B-C" State Wrestling Tournament

CHAMPIONS BRACKET 189 LB

Brown, T.EUR (97) Chapman, B.CHK — Brown 13-5 MD
Gundlach, A.FRF (98) Rakstad, D.POP — Rakstad 5.35 PIN
(217) Rakstad 13-5 MD
Clement, T.BOU (99) McWilliams, J.BAK — McWilliams 10-6 D
Hill, C.ARL (100) Jones, A.CON — Jones 0.32 PIN
(218) Jones 0.29 PIN
(333) Jones 0.43 PIN
Buck, K.CHO (101) Murch, J.GLA — Buck 1.11 PIN
Rose, J.TFS (102) Larson, D.CBH — Larson 0.52 PIN
(219) Buck 5-3 D
Baker, J.FTN (103) Thornton, A.BSY — Baker 5.43 PIN
Micu, A.DLG (104) Hinebauch, B.HPH — Hinebauch 1.51 PIN
(220) Hinebauch 0.51 PIN
(334) Buck 1.32 PIN
(405) CHAMPION Jones 3.2 PIN

CONSOLATION BRACKET 189 LB

Chapman, B.CHK (161) Gundlach, A.FRF — Baker, J.FTN (273) Gundlach 1.37 PIN
Clement, T.BOU (162) Hill, C.ARL — Clement 1.39 PIN
Murch, J.GLA (163) Rose, J.TFS — Murch 5-3 D
Thornton, A.BSY (164) Micu, A.DLG — Thornton 1.41 PIN
(273) Gundlach 4-0 D
(274) Larson, D.CBH
McWilliams, J.BAK (275)
(275) McWilliams 6-1 D
(276) Brown, T.EUR
(276) Brown 14-13 D
(305) Clement 7-6 D
(306) Brown 9-2 D
Rakstad, D.POP (361)
(361) Gundlach 12-3 MD
(362) Hinebauch, B.HPH
Gundlach 5-3 D (389) Hinebauch 11-5 D — 3RD Hinebauch 9-3 D
Rakstad, D.POP (390) Brown, T.EUR — 5TH Brown 4-1 D

2003 "B-C" State Wrestling Tournament

CHAMPIONS BRACKET Unlimited

- nkins, P.FLC
(105)
Gagnon, S.CHE
- Jenkins — 1.51 — PIN

(221)

Hutchings, A.TSD
(106)
Treptow, D.SHP
- Treptow — 1.2 — PIN
- Treptow — 0.12 — PIN

(335)

George, M.FRF
(107)
Martin, A.HPH
- George — 4.43 — PIN

(222)

Goodsell, A.FTN
(108)
Hepp, J.CON
- Hepp — 0.47 — PIN
- Hepp — 2.34 — PIN
- Hepp — 5.02 — PIN

(406) CHAMPION Hepp — 1-0 — D

Stutzman, R.CAS
(109)
Rooney, S.BRO
- Stutzman — 1.15 — PIN

(223)

Sanders, A.TFS
(110)
Thompson, I.CBH
- Thompson — 5.1 — PIN
- Thompson — 7-6 — D

(336)

Kovacs, J.LOY
(111)
.liams, J.BSY
- Williams — 3.26 — PIN

(224)

Schuler, D.FTB
(112)
Beach, C.BAK
- Beach — 1.22 — PIN
- Beach — 0.43 — PIN
- Thompson — 6-4 — D

CONSOLATION BRACKET Unlimited

Gagnon, S.CHE
(165)
Hutchings, A.TSD
- Williams, J.BSY (277) Gagnon — 2.3 — PIN
- Williams — 2.28 — PIN

(307)

Martin, A.HPH
(166)
Goodsell, A.FTN
- Martin — 0.53 — PIN (278) Stutzman, R.CAS
- Stutzman — 0.43 — PIN
- Treptow, D.SHP (363) Stutzman — 3.22 — PIN

(308)

Rooney, S.BRO
(167)
Sanders, A.TFS
- George, M.FRF (279) Sanders — 2.03 — PIN
- Sanders — 2.59 — PIN

Kovacs, J.LOY
(168)
Schuler, D.FTB
- Schuler — 1.25 — PIN (280) Jenkins, P.FLC
- Jenkins — 2.55 — PIN
- Jenkins — 1.37 — PIN (364) Beach, C.BAK

Stutzman — 3.3 — PIN
(391) 3RD
Beach — 2.46 — PIN
- Stutzman — 3-1 — D

Treptow, D.SHP
(392) 5TH
Jenkins, P.FLC
- Treptow — 3.33 — PIN