1996/97 CLASS A STATE WRESTLING TOURNAMENT

CHAMPIONS BRACKET 98 LB

:NCENT, D. COL (1)
** BYE ****
VINCENT 0-0 BYE

(169)
)NACO, K. DIL (2)
VAGE, J. WFH
MONACO 15-12 D

VINCENT 1.12 PIN

)HNSON, S. POL (3)
DE, M. GLE
JOHNSON 0.35 PIN

(170)
WELL, N. HAV (4)
FELMAN, T. HAR
UFFELMAN 8-4 D

JOHNSON 0.25 PIN

(309)
VINCENT 3-1 D

RTOLETTI, T. ANA (5)
)BERTS, K. RON
BARTOLETTI 1.4 PIN

(171)
NES, F. LIB (6)
NNINGHAM, B. CEN
JANES 1.01 PIN

JANES 9-4 D

(393) CHAMPION VINCENT 10-2 MD

)SS, C. SID (7)
DONALD, S. BRW
FOSS 15-1 MD

(172)
ANLEY, K. CFS (8)
AIR, D. LIV
STANLEY 0.08 PIN

STANLEY 2.54 PIN

(310)
STANLEY 5.28 PIN

CONSOLATION BRACKET 98 LB

** BYE ****
(113)
VAGE, J. WFH
FOSS, C. SID (225)
SAVAGE 0-0 BYE

FOSS 2.08 PIN

DE, M. GLE (114)
WELL, N. HAV
NEWELL 9-2 D
(226)
BARTOLETTI, T. ANA

BARTOLETTI 2.4 PIN

(281)
JOHNSON, S. POL (337)
BARTOLETTI 5-2 D

)BERTS, K. RON (115)
NNINGHAM, B. CEN
UFFELMAN, T. HAR (227)
CUNNINGHAM 0.59 PIN

UFFELMAN 2.47 PIN

DONALD, S. BRW (116)
AIR, D. LIV
MCDONALD 2.24 PIN
(228)
MONACO, K. DIL

MONACO 12-2 MD

(282)
MONACO 4.45 PIN
(338)
JANES, F. LIB

HNSON 4.49 PIN
(365) 3RD
NES 0.54 PIN
JOHNSON 5-1 D

BARTOLETTI, T. ANA
(366) 5TH
MONACO, K. DIL
BARTOLETTI 7-0 D

1996/97 CLASS A STATE WRESTLING TOURNAMENT

CHAMPIONS BRACKET 112 LB

'LOR, T. COL
(17)
AUTHIER, J. ANA

TAYLOR 1.59 PIN

(177)

ALL, J. LIV
(18)
*** BYE ****

HALL 0-0 BYE

TAYLOR 0.38 PIN

(313)

TERLING, L. CFS
(19)
JLLER, C. GLE

STERLING 0.55 PIN

(178)

OLLAND, J. DIL
(20)
INGER, T. MCY

LINGER 16-5 MD

STERLING 10-5 D

TAYLOR 12-5 D

(395) CHAMPION TAYLOR 10-2 MD

ILHAM, B. BRW
(21)
*** BYE ****

GILHAM 0-0 BYE

(179)

AUMBERGER, R. POL
(22)
OLYCROSS, J. LAU

HOLYCROSS 3.24 PIN

HOLYCROSS 1.16 PIN

(314)

HOLYCROSS 10-3 D

GGUM, M. SID
(23)
KMAN, S. LEW

EGGUM 3.5 PIN

(180)

AIRMONT, T. RON
(24)
YERS, C. HAV

CLAIRMONT 0.39 PIN

EGGUM 2-1 D

CONSOLATION BRACKET 112 LB

STERLING, L. CFS

(341)

CLAIRMONT 7-2 D

CLAIRMONT, T. RON
(233)
UTHIER, J. ANA
(121)
*** BYE ****

VAUTHIER 0-0 BYE

CLAIRMONT 2.11 PIN

(285)

ILLER, C. GLE
(122)
LLAND, J. DIL

HOLLAND 7-1 D
(234)
GILHAM, B. BRW

GILHAM 9-2 D

LINGER, T. MCY
(235)
*** BYE ****
(123)
AUMBERGER, R. POL

BAUMBERGER 0-0 BYE

BAUMBERGER 5-4 D

(286)

BAUMBERGER 2.09 PIN

(342)

EGGUM, M. SID

ICKMAN, S. LEW
(124)
YERS, C. HAV

RUCKMAN 0.49 PIN
(236)
HALL, J. LIV

RUCKMAN 8-4 D

'ERLING 7-0 D
(369) 3RD
GGUM 4-1 D

STERLING 10-1 MD

CLAIRMONT, T. RON
(370) 5TH
BAUMBERGER, R. POL

BAUMBERGER 3-1 D

1996/97 CLASS A STATE WRESTLING TOURNAMENT

CHAMPIONS BRACKET 105 LB

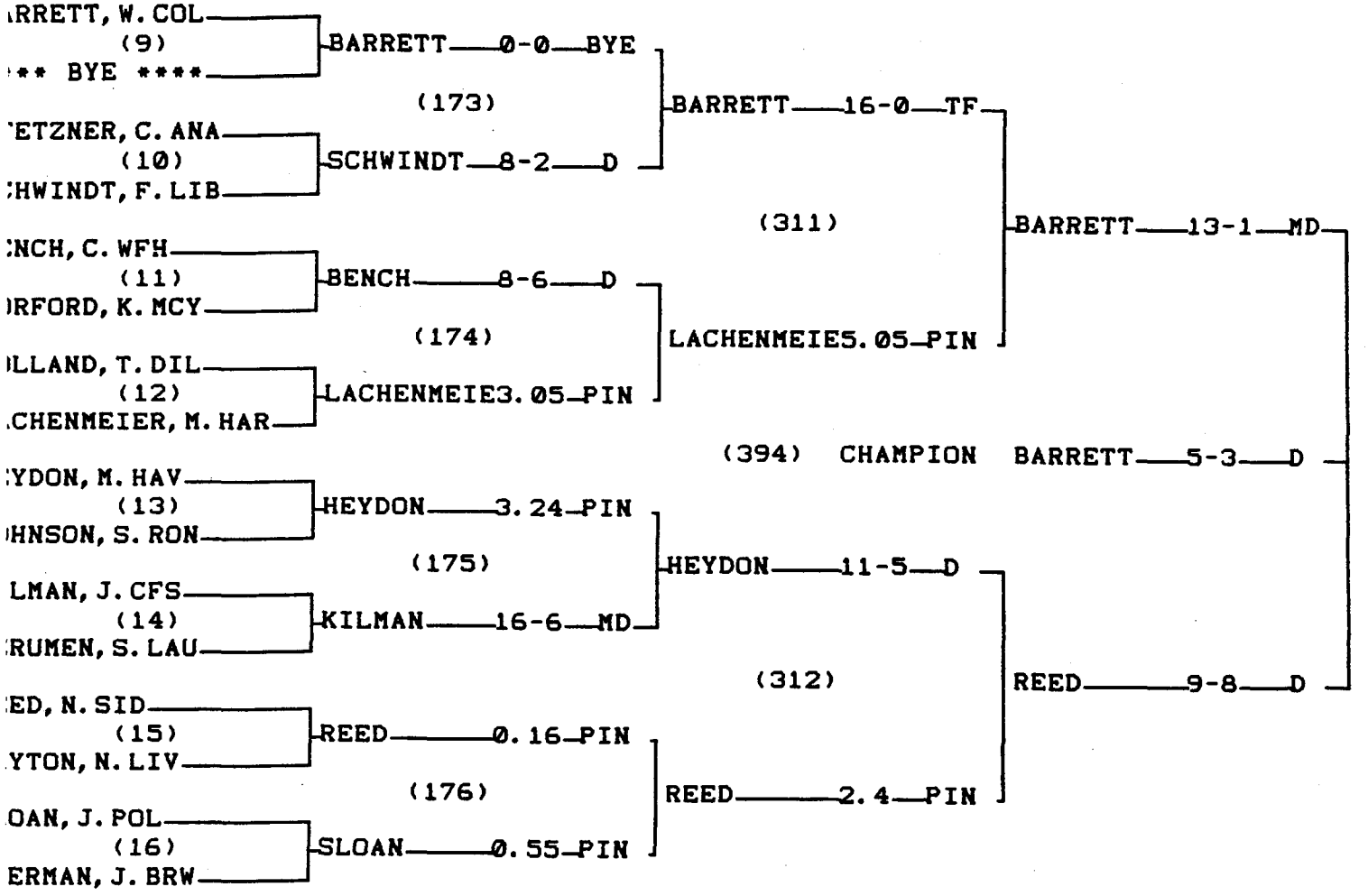

CONSOLATION BRACKET 105 LB

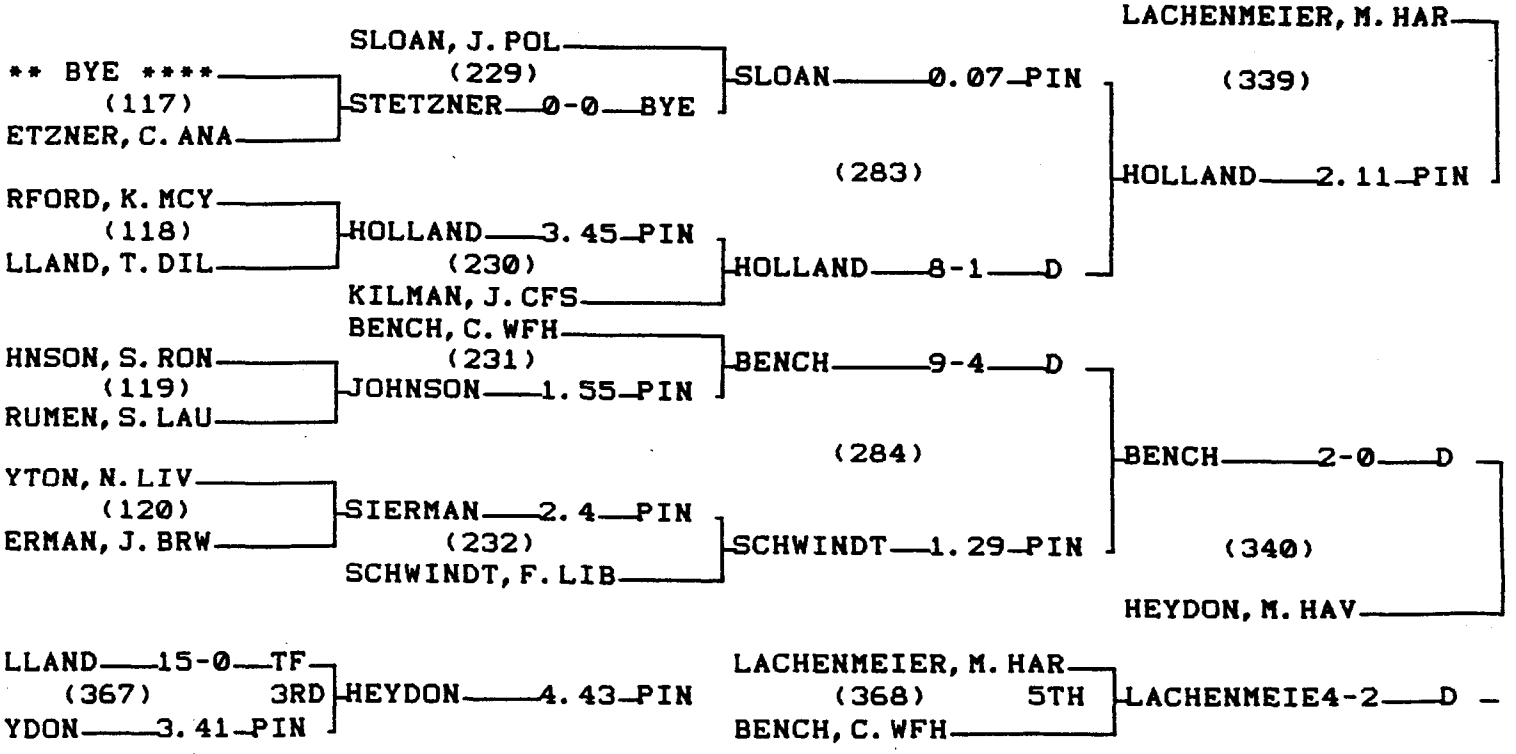

1996/97 CLASS A STATE WRESTLING TOURNAMENT

CHAMPIONS BRACKET 125 LB

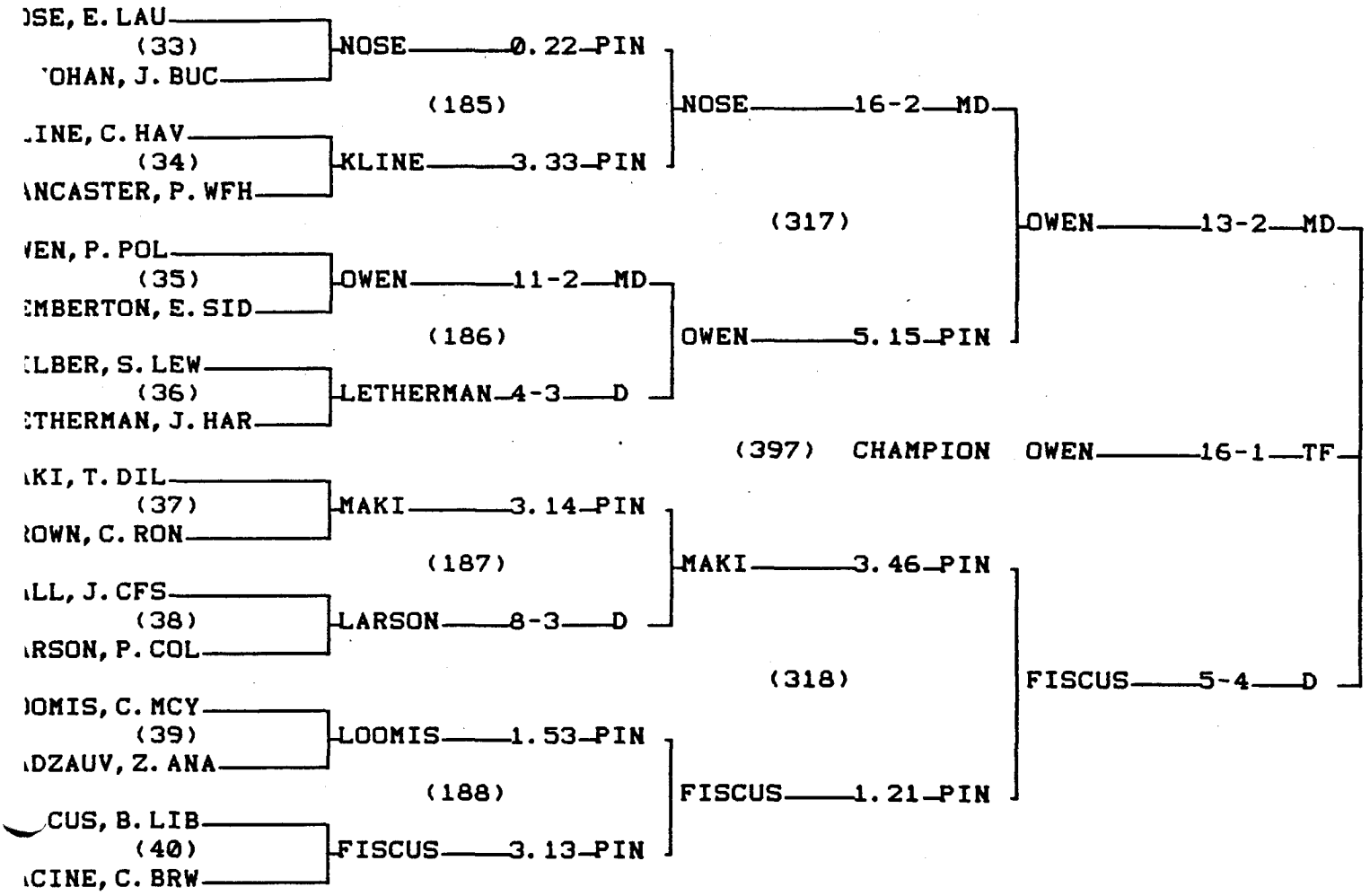

CONSOLATION BRACKET 125 LB

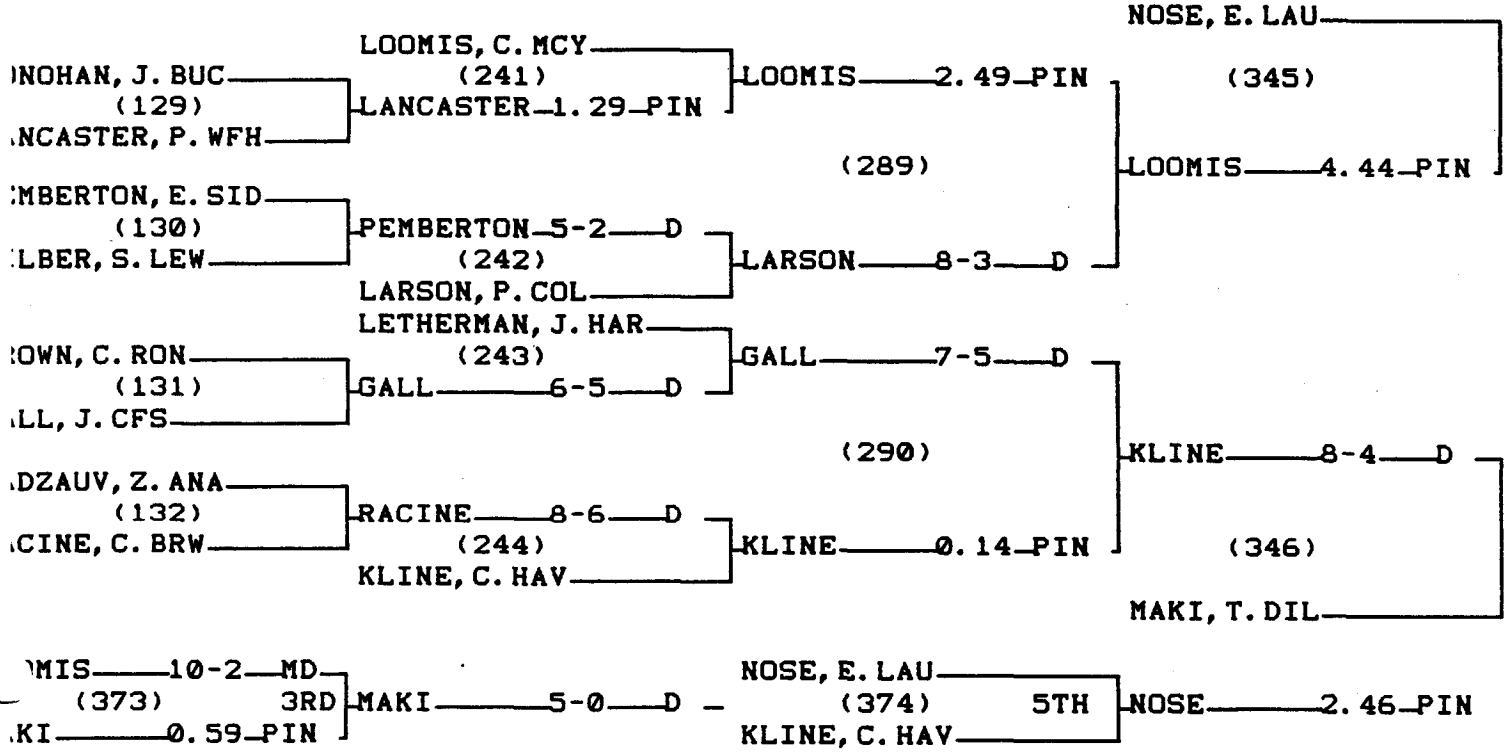

1996/97 CLASS A STATE WRESTLING TOURNAMENT

CHAMPIONS BRACKET 119 LB

:EVOST, L. SID
(25)
:NNEMAN, C. HAV

PREVOST 2.53 PIN

(181)

ILASKI, T. ANA
(26)
RPENTER, G. LIB

KULASKI 1.57 PIN

PREVOST 1.13 PIN

(315)

:HAEFFER, C. CFS
(27)
'FELMAN, J. HAR

SCHAEFFER 0.58 PIN

(182)

NFORD, J. LEW
(28)
IRREY, T. MCY

CURREY 5-3 D

SCHAEFFER 2.29 PIN

PREVOST 6-4 D

(396) CHAMPION PREVOST 5.56 PIN

:ITE, T. BRW
(29)
:VRIES, D. POL

WHITE 8-1 D

(183)

:OWN, D. RON
(30)
SON, B. COL

OLSON 12-11 D

WHITE 2-1 D

(316)

:YER, A. LAU
(31)
'ERN, B. LIV

MEYER 2.55 PIN

(184)

:NCH, L. WFH
(32)
FFAKER, D. DIL

BENCH 12-6 D

MEYER 5-1 D

WHITE 4-2 D

CONSOLATION BRACKET 119 LB

NNEMAN, C. HAV
(125)
RPENTER, G. LIB

BENCH, L. WFH
(237)
FINNEMAN 3.56 PIN

BENCH 0.59 PIN

(287)

FELMAN, J. HAR
(126)
NFORD, J. LEW

UFFELMAN 5-4 D

(238)

OLSON, B. COL

UFFELMAN 2-1 D

VRIES, D. POL
(127)
OWN, D. RON

CURREY, T. MCY
(239)

BROWN 2.56 PIN

CURREY 12-2 MD

(288)

ERN, B. LIV
(128)
FFAKER, D. DIL

HUFFAKER 1.33 PIN
(240)
KULASKI, T. ANA

KULASKI 13-4 MD

CURREY 2.41 PIN

(344)

SCHAEFFER, C. CFS
(343)

BENCH 2.16 PIN

MEYER, A. LAU

NCH 7-4 D
(371) 3RD
RREY 2-1 D

CURREY 5-0 D

SCHAEFFER, C. CFS
(372) 5TH
MEYER, A. LAU

MEYER 7-5 D

1996/97 CLASS A STATE WRESTLING TOURNAMENT

CHAMPIONS BRACKET 135 LB

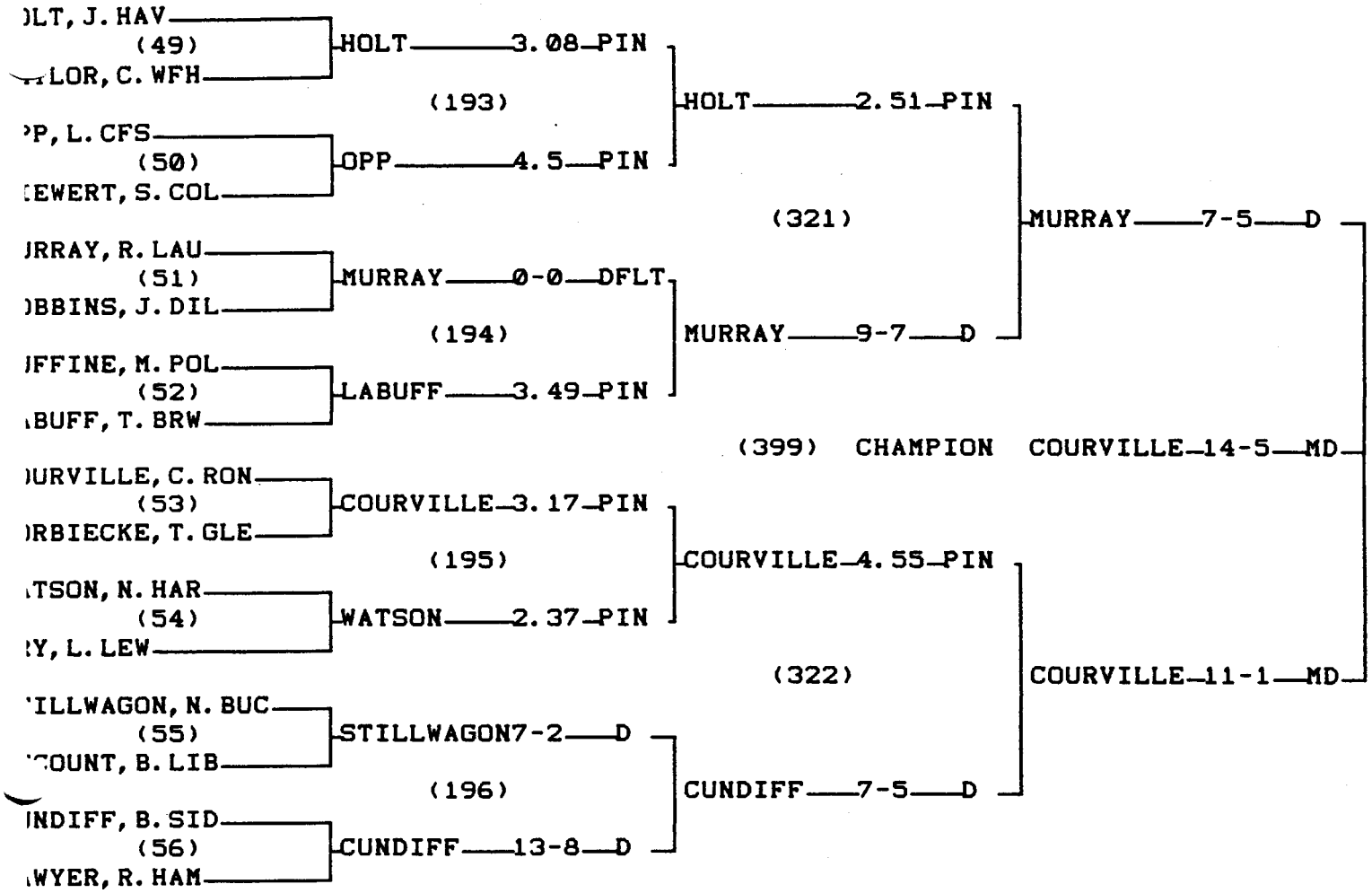

CONSOLATION BRACKET 135 LB

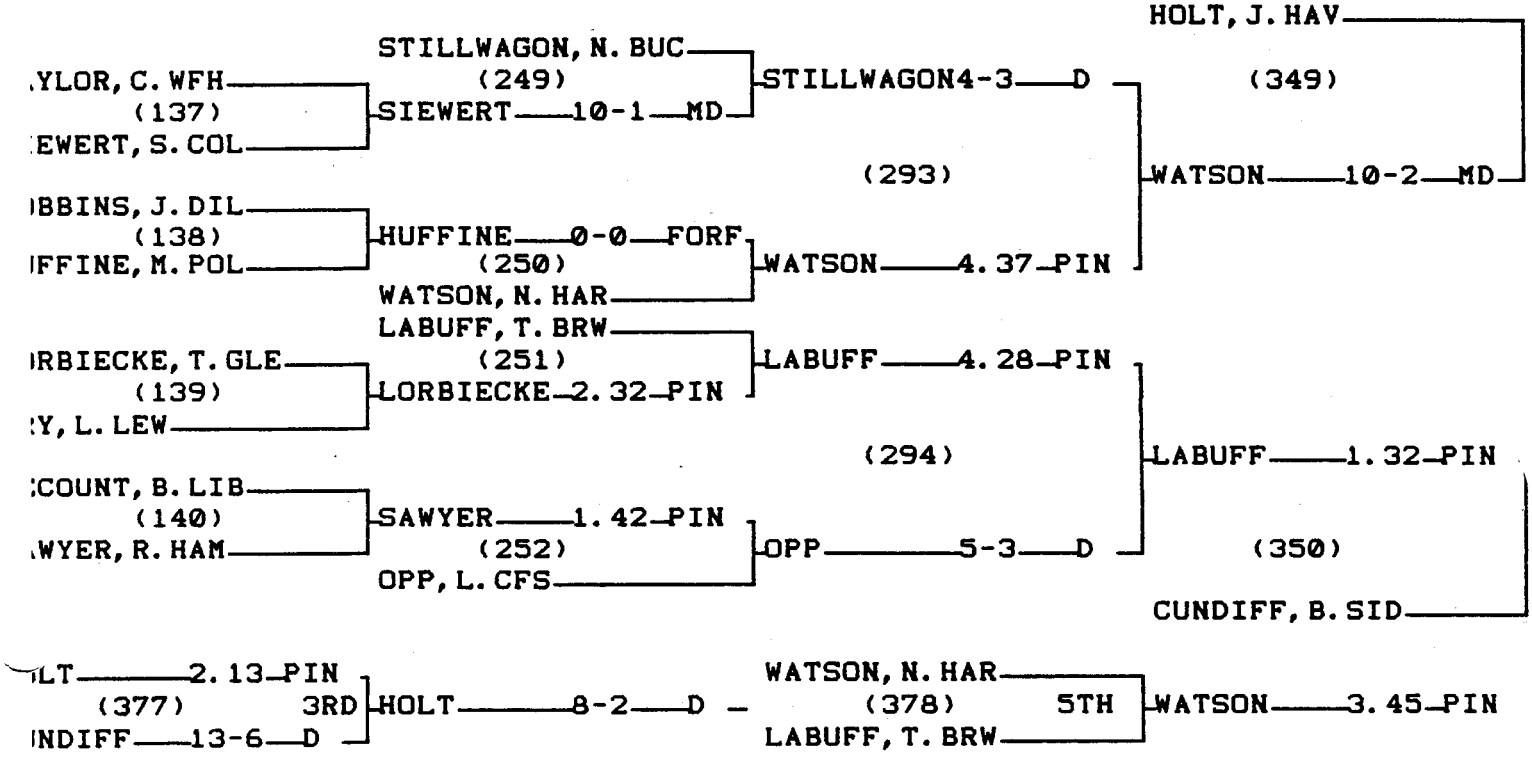

1996/97 CLASS A STATE WRESTLING TOURNAMENT

CHAMPIONS BRACKET 130 LB

ARTINSEN, D. DIL (41) — REISZ, S. POL
MARTINSEN 5.29 PIN (189)

EUM, P. RON (42) — NKNEY, P. COL
REUM 15-5 MD

REUM 1.11 PIN (319)

EITER, B. LAU (43) — NDREWS, B. ANA
REITER 0.41 PIN (190)

ROWN, J. WFH (44) — IMISON, K. HAV
BROWN 4.52 PIN

REITER 12-2 MD

REITER 11-0 MD (398) CHAMPION

TAMM, M. HAM (45) — ESHAW, J. SID
STAMM 3.38 PIN (191)

ALD, K. HAR (46) — EST, B. LIV
WALD 3.38 PIN

WALD 5.08 PIN (320)

AY, W. LEW (47) — ELBURG, K. LIB
HELBURG 1.33 PIN (192)

ORFORD, C. MCY (48) — AUMGARTNER, T. CFS
MORFORD 13-0 MD

HELBURG 6-2 D

WALD 6-4 D

WALD 5.03 PIN

CONSOLATION BRACKET 130 LB

REISZ, S. POL (133) — IKNEY, P. COL
MORFORD, C. MCY (245) — ANKNEY 2.27 PIN

MORFORD 8-2 D (291)

IDREWS, B. ANA (134) — MISON, K. HAV
JIMISON 4.11 PIN (246) — STAMM, M. HAM

STAMM 7-1 D

REUM, P. RON (347)

STAMM 5-0 D

ESHAW, J. SID (135) — EST, B. LIV
BROWN, J. WFH (247) — WEST 3.54 PIN

BROWN 12-4 MD (292)

AY, W. LEW (136) — AUMGARTNER, T. CFS
HAY 7-2 D (248) — MARTINSEN, D. DIL

HAY 3-1 D

BROWN 5-1 D (348)

HELBURG, K. LIB

TAMM 8-6 D (375) 3RD — LBURG 0.31 PIN
STAMM 3-1 D

REUM, P. RON (376) 5TH — BROWN, J. WFH
BROWN 5-0 D

1996/97 CLASS A STATE WRESTLING TOURNAMENT

CHAMPIONS BRACKET 145 LB

ON, R. DIL
(65)
)NEYCUTT, J. HAM
PILON 1.57 PIN
(201)
MORSE 4-2 D

)RSE, D. WFH
(66)
NEIL, P. LAU
MORSE 8-2 D

(325)
DOCKTOR 6-2 D

)CKTOR, R. GLE
(67)
:NGERY, P. HAV
DOCKTOR 20-5 TF
(202)
DOCKTOR 8-6 D

:MOTTS, B. CFS
(68)
.YLOR, C. LEW
DEMOTTS 3.49 PIN

(401) CHAMPION DOCKTOR 4.5 PIN

IEFF, B. RON
(69)
'RANDEL, M. MCY
CHEFF 3.09 PIN
(203)
CHEFF 1.55 PIN

:ANZEN, B. SID
(70)
:OWN, M. ANA
BROWN 0-0 FORF

(326)
ANDERSON 13-5 MD

:LHAM, C. BRW
(71)
R, K. POL
GILHAM 18-2 TF
(204)
ANDERSON 6-2 D

IDERSON, D. COL
(72)
.IFF, T. LIB
ANDERSON 17-2 TF

CONSOLATION BRACKET 145 LB

MORSE, D. WFH
(353)
O'NEIL 10-1 MD

GILHAM, C. BRW
(257)
O'NEIL 5.43 PIN

)NEYCUTT, J. HAM
(145)
NEIL, P. LAU
O'NEIL 0.37 PIN

(297)

NGERY, P. HAV
(146)
.YLOR, C. LEW
TAYLOR 14-2 MD
(258)
BROWN, M. ANA
TAYLOR 2.32 PIN

DEMOTTS, B. CFS
(259)
DEMOTTS 4.43 PIN

'RANDEL, M. MCY
(147)
:ANZEN, B. SID
SPRANDEL 0-0 FORF

(298)
DEMOTTS 10-6 D

.IR, K. POL
(148)
.IFF, T. LIB
LAIR 8-2 D
(260)
PILON, R. DIL
PILON 2.26 PIN

(354)
CHEFF, B. RON

)RSE 15-2 MD
(381) 3RD
IEFF 6-4 D
MORSE 5-1 D

O'NEIL, P. LAU
(382) 5TH
DEMOTTS, B. CFS
O'NEIL 12-2 MD

1996/97 CLASS A STATE WRESTLING TOURNAMENT

CHAMPIONS BRACKET 140 LB

ISHER, K. HAV (57) EILER, C. CFS — FISHER 14-4 MD (197)

SHLEY, I. RON (58) ANDRY, J. CEN — ASHLEY 3.17 PIN (197)

FISHER 11-3 MD (323)

EVERSON, J. SID (59) HOMPSON, B. ANA — SEVERSON 1.08 PIN (198)

MERKER, D. LIB (60) OOLSEY, D. LEW — SMERKER 10-2 MD (198)

SEVERSON 3.23 PIN (323)

FISHER 7-2 D (400)

(400) CHAMPION FISHER 5.51 PIN

EN, M. POL (61) DOES IT, F. HAR — OWEN 3.32 PIN (199)

LEY, C. MCY (62) CHAEL, B. BRW — WILEY 0-0 FORF (199)

OWEN 19-4 TF (324)

GENBARTH, J. DIL (63) ES, B. HAM — HAGENBARTH 3.19 PIN (200)

RTH, M. GLE (64) ODGETT, D. WFH — BARTH 7-4 D (200)

HAGENBARTH 5-3 D (324)

OWEN 12-1 MD (400)

CONSOLATION BRACKET 140 LB

ILER, C. CFS (141) NDRY, J. CEN — BARTH, M. GLE (253) ZEILER 18-3 TF (253)

BARTH 2-0 D (295)

OMPSON, B. ANA (142) OLSEY, D. LEW — WOOLSEY 2.39 PIN (254) WILEY, C. MCY

WOOLSEY 4-1 D (295)

DOES IT, F. HAR (143) CHAEL, B. BRW — SMERKER, D. LIB (255) HE DOES IT 0-0 FORF (255)

SMERKER 2-1 D (296)

ES, B. HAM (144) ODGETT, D. WFH — BLODGETT 2.55 PIN (256) ASHLEY, I. RON

ASHLEY 3-2 D (296)

SEVERSON, J. SID (351)

BARTH 9-2 D (351)

ASHLEY 4.12 PIN (352)

HAGENBARTH, J. DIL (352)

VERSON 5-3 D (379) GENBARTH 5-2 D — HAGENBARTH 2-1 D (379) 3RD

BARTH, M. GLE (380) ASHLEY, I. RON — ASHLEY 10-5 D (380) 5TH

1996/97 CLASS A STATE WRESTLING TOURNAMENT

CHAMPIONS BRACKET 160 LB

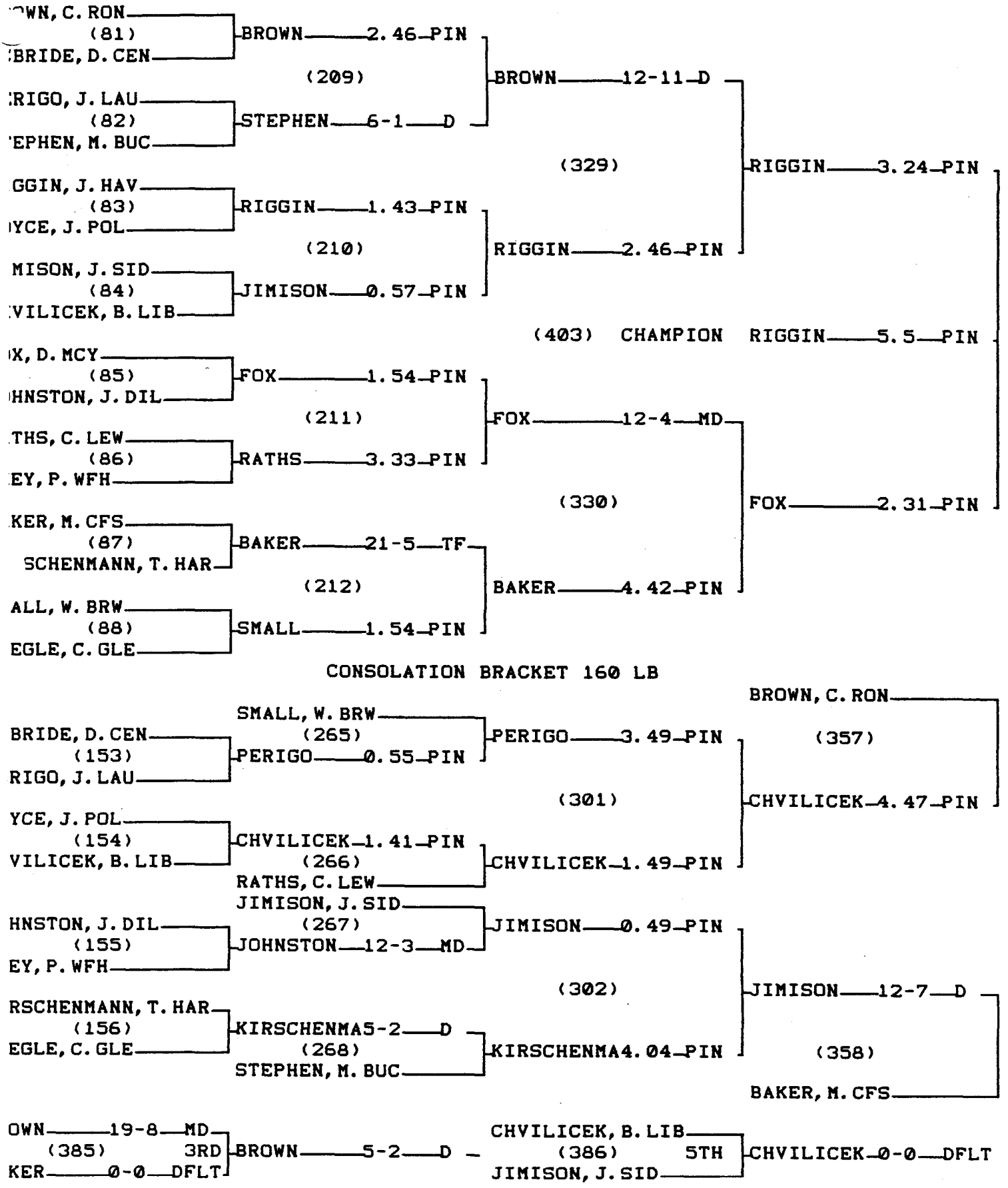

CONSOLATION BRACKET 160 LB

1996/97 CLASS A STATE WRESTLING TOURNAMENT

CHAMPIONS BRACKET 152 LB

:LLIAMS, M. CFS (73) :WMAN, T. COL — WILLIAMS 0.54 PIN

:SHON, M. SID (74) ıRVIS, R. HAV — DISHON 1.41 PIN

(205) — WILLIAMS 5-2 D

IRNS, B. LIV (75) IRRELL, J. LIB — BURNS 2.23 PIN

IALEN, J. GLE (76) IOKER, N. HAM — PHALEN 4.12 PIN

(206) — BURNS 0.59 PIN

(327) — BURNS 5-3 D

:LP, T. HAR (77) IGHT, C. LEW — DELP 7-4 D

GARE, J. BRW (78) NLEY, W. POL — AUGARE 3.1 PIN

(207) — AUGARE 3.44 PIN

SHER, J. RON (79) UGHTERLY, S. LAU — FISHER 10-9 D

ITH, J. DIL (80) GA, K. MCY — SMITH 9-1 MD

(208) — FISHER 1.46 PIN

(328) — AUGARE 3.15 PIN

(402) CHAMPION BURNS 18-9 MD

CONSOLATION BRACKET 152 LB

WMAN, T. COL (149) RVIS, R. HAV — JARVIS 4.46 PIN

SMITH, J. DIL (261) — SMITH 7-3 D

RRELL, J. LIB (150) DKER, N. HAM — BURRELL 12-6 D (262) DELP, T. HAR

DELP 1.35 PIN

(299) — DELP 3-2 D

WILLIAMS, M. CFS (355)

IGHT, C. LEW (151) NLEY, W. POL — WRIGHT 12-3 MD

PHALEN, J. GLE (263) — PHALEN 6-5 D

JGHTERLY, S. LAU (152) GA, K. MCY — DRGA 2.2 PIN (264) DISHON, M. SID

DISHON 0.32 PIN

(300) — PHALEN 5-4 D

(356) FISHER, J. RON

LLIAMS 8-0 MD (383) ALEN 9-0 MD — WILLIAMS 7-2 D — 3RD

DELP, T. HAR (384) FISHER, J. RON — DELP 8-2 D — 5TH

1996/97 CLASS A STATE WRESTLING TOURNAMENT

CHAMPIONS BRACKET 189 LB

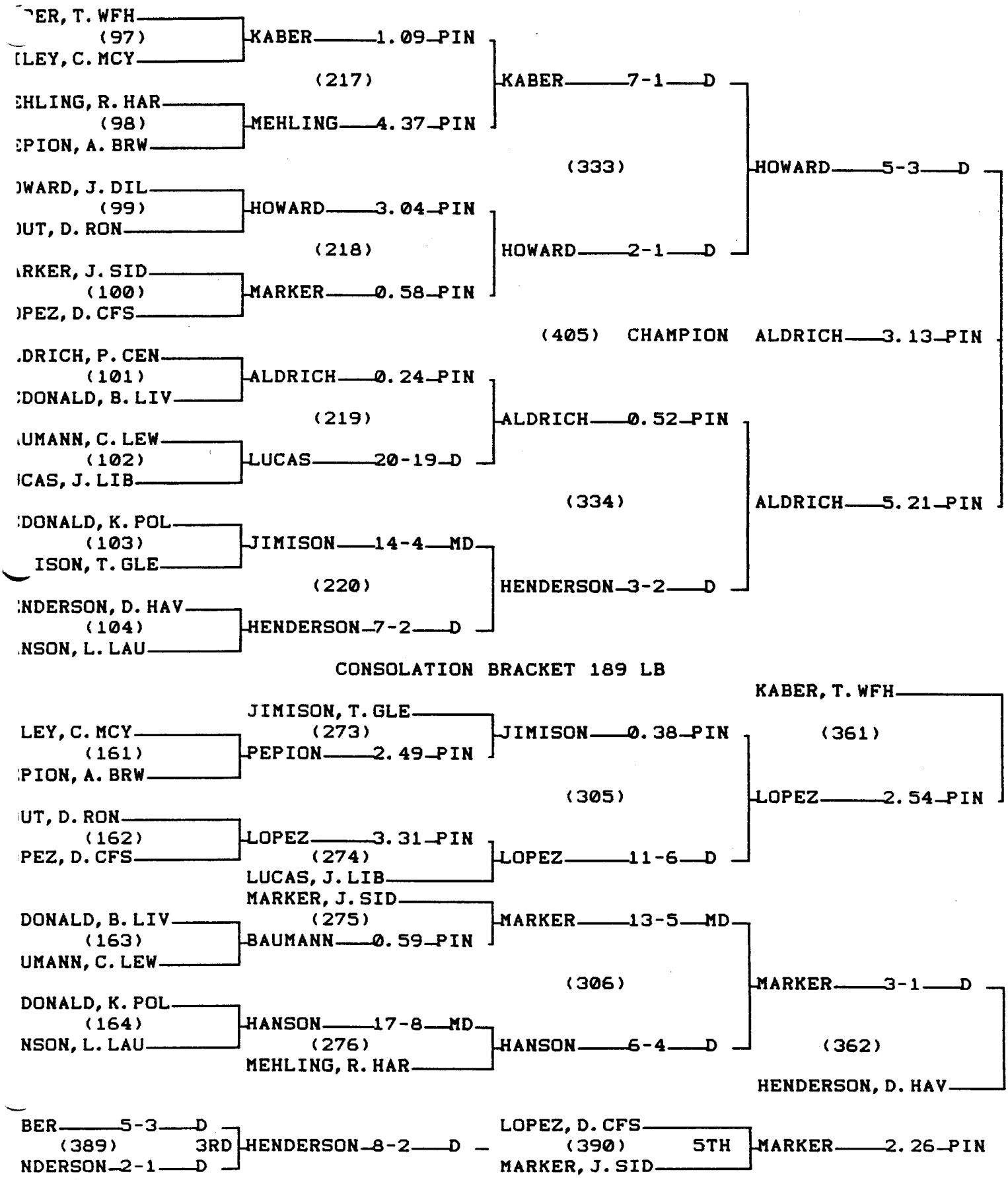

CONSOLATION BRACKET 189 LB

1996/97 CLASS A STATE WRESTLING TOURNAM

CHAMPIONS BRACKET 275 LB

)NTGOMERY, J. CFS
(105)
*** BYE ****

MONTGOMERY 0-0 BYE

(221)

IOMPSON, K. MCY
(106)
ARTFORD, R. LEW

THOMPSON 0.39 PIN

MONTGOMERY 6-1 D

(335)

'ANGLER, S. ANA
(107)
)NES, M. POL

SPANGLER 3.2 PIN

(222)

)GOLSHAK, B. HAR
(108)
)HLER, F. HAM

KOGOLSHAK 1.52 PIN

KOGOLSHAK 1-0 D

KOGOLSHAK 5-1 D

(406) CHAMPION

KOGOLSHAK 7-5 D

AYTER, C. CEN
(109)
)UNTS, Q. LIV

HAYTER 1 PIN

(223)

)STIC, G. HAV
(110)
INGST, J. LIB

BOSTIC 3.31 PIN

HAYTER 5.18 PIN

(336)

HAYTER 3-1 D

:BSTER, F. RON
(111)
:FUENTES, L. SID

WEBSTER 3.23 PIN

(224)

ATT, G. BRW
(112)
:LSON, M. LAU

MATT 5.13 PIN

MATT 5-1 D

CONSOLATION BRACKET 275 LB

*** BYE ****
(165)
ARTFORD, R. LEW

WEBSTER, F. RON
(277)
HARTFORD 0-0 BYE

WEBSTER 1.16 PIN

(307)

INES, M. POL
(166)
IHLER, F. HAM

BUHLER 2.28 PIN

(278)
BOSTIC, G. HAV

BUHLER 4.19 PIN

MONTGOMERY, J. CFS
(363)

BUHLER 9-4 D

)UNTS, Q. LIV
(167)
INGST, J. LIB

SPANGLER, S. ANA
(279)
JUNGST 5-3 D

SPANGLER 1.42 PIN

(308)

:FUENTES, L. SID
(168)
:LSON, M. LAU

NELSON 3-2 D
(280)
THOMPSON, K. MCY

THOMPSON 2.05 PIN

SPANGLER 7-5 D

(364)

MATT, G. BRW

INTGOMERY 10-6 D
(391) 3RD
'ANGLER 5-4 D

MONTGOMERY 5-3 D

BUHLER, F. HAM
(392) 5TH
MATT, G. BRW

BUHLER 3-1 D